Fractional Flow Reserve: Overview and Implications for Clinical Decision Making

WILLIAM KONG-TO HAU

From Department of Physiology and Institute of Cardiovascular Science and Medicine, Faculty of Medicine, The University of Hong Kong, Hong Kong

HAU: ***Fractional Flow Reserve: Overview and Implications for Clinical Decision Making.*** *Pressure derived fractional flow reserve (FFR) is a well-validated index to assess functional significance of stenosis severity that has evolved from a physiological index to a clinical tool. The objective of this paper is to provide a short overview of the theoretical and physiological background of this physiological assessment technique and to focus on its clinical applicability in both diagnostic and interventional procedures. (J HK Coll Cardiol 2003;11:83-89)*

Fractional flow reserve, hyperemia, pressure guide wire, vasodilator

摘要
得自於流量貯備分數的壓力參數，對於評價功能性顯著狹窄的嚴重程度是一項很有效的指標，它已經從一項生理指標走向臨床運用。本文的目的在於就這項生理評估技術的理論和生理背景作一個簡要的概述，並且重點闡述它在診斷和介入操作中臨床運用。

關鍵詞：流量貯備分數　充血　壓力導線　血管舒張藥

Introduction

One of the main limitations of coronary angiography is the inability to determine the physiological significance of a stenosis on coronary blood flow. As a result, physiological assessment techniques have been introduced to determine the functional significance of coronary lesions that may require revascularization. With recent technology advances in interventional cardiology, miniaturized pressure sensing guide wires for the assessment of distal coronary pressure are now available.[1] Also with the development of the fractional flow reserve (FFR) index have offered an easy and convenient method for measuring the physiological impact of a coronary stenosis.[2] FFR is defined as the ratio of the maximal blood flow achievable in a stenotic vessel to the normal maximal flow in the same vessel, which represents the fraction of maximum flow that can still be maintained in spite of the presence of the stenosis. FFR is an important index in the diagnosis of myocardial ischemia and the decision for coronary intervention. It is exactly this index which indicates to what degree a patient is limited by the coronary stenosis.

Concept of Fractional Flow Reserve

FFR has been extensively studied and clinically validated.[2-5] The basis of the concept is illustrated in Figure 1. Under conditions of maximum arteriolar vasodilation, myocardial resistance of that system will be minimal, and thus blood flow is proportional to driving pressure. If there is no stenosis in the artery,

Address for reprints: Dr. William Kong-To Hau
Department of Physiology, Faculty of Medicine, The University of Hong Kong, 21 Sassoon Road, Pokfulam, Hong Kong

Tel: (852) 2819 9266, Fax: (852) 28559730

Received May 26, 2003; revision accepted June 17, 2003

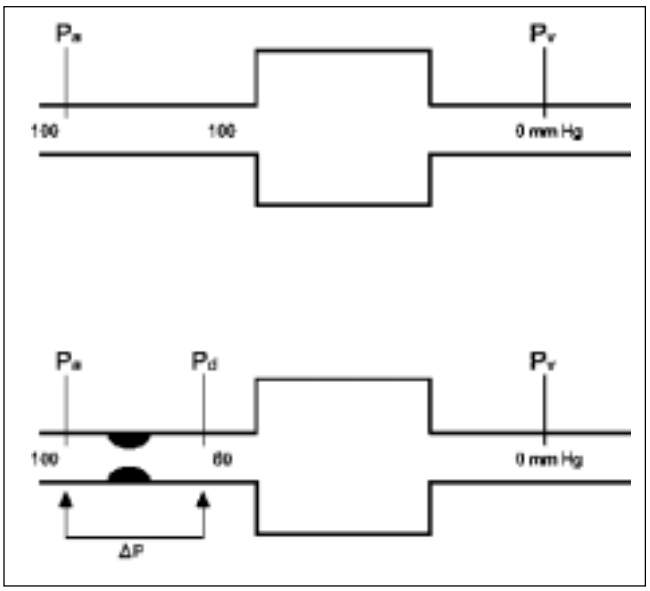

Figure 1. *A simplified schematic illustration of the coronary artery and its dependent myocardial vascular bed to explain the concept of FFR. At maximum hyperemia, myocardial perfusion pressure would be 100 mmHg if the artery is normal with no stenosis. However, if there is a stenosis, the perfusion pressure will drop to 60 mmHg. Therefore the ratio of the maximal blood flow achievable in a stenotic vessel to the normal maximal flow in the same vessel is (60-0)/(100-0), which implies the maximum amount of blood flow to the myocardium in this stenotic artery is only 60% of normal maximum flow if the artery is free of any disease, and by definition FFR of the myocardium is 0.6. Where P_a, P_d and P_v represent mean aortic, distal coronary and central venous pressures obtained at maximum coronary hyperemia.*

driving pressure over the myocardium will be 100 mmHg. However, if there is a stenosis, it will result in a gradient of 40 mmHg at maximum vasodilation. The overall maximum driving pressure has fallen to only 60 mmHg, which implies the maximum amount of blood flow to the myocardium in this stenotic artery is only 60% of normal maximum flow if the artery is free of any disease, and by definition FFR of the myocardium is 0.6. In other words, FFR represents the fraction of maximum flow that can be still maintained in spite of the presence of the stenosis, and can be expressed by the following equation:

$$\text{FFR} = \frac{\text{Maximum myocardial flow in the presence of a coronary stenosis}}{\text{Normal maximum flow}}$$

Or

$$\text{FFR} = \frac{P_d - P_v}{P_a - P_v} \cong \frac{P_d}{P_a}$$

Where P_a, P_d and P_v represent mean aortic, distal coronary and central venous pressures obtained at maximum coronary hyperemia. Because central venous pressure usually is close to zero, P_v can be neglected. As a result, an accurate estimate of FFR can be derived from the ratio of mean distal coronary artery pressure to aortic pressure during maximal coronary hyperemia. Pa is measured routinely by the coronary guiding catheter, the only things needed to measure FFR are a pressure guide wire enabling reliable distal coronary pressure recording and a maximum hyperemic stimulus. The standard means for inducing hyperemia is by the administration of adenosine.

FFR is a lesion specific index of epicardial stenosis severity. The theoretical unequivocal normal value for FFR is 1.0;[2] a value of 0.75 reliably identifies stenosis associated with inducible ischemia.[6] As a normal reference vessel is not required, FFR can be used in multivessel disease.[2] The measurement of FFR is highly reproducible and is independent of changes in hemodynamics or myocardial contractility.[7]

Coronary Pressure Measurement

At present, two FDA-approved pressure guide wire systems are available: Pressure Analyzer (RADI Medical Systems, Sweden) and WaveMap (JOMED AB, Sweden). Both are micromanometer-tipped 0.014-inch guide wires with a pressure sensor located just proximal to the junction between the radiopaque distal tip and the nonradiopaque part of the wire. Their handling characteristics are very similar to

conventional angioplasty guide wires and are compatible with monorail balloon catheters. The proximal end of each wire is disconnectable and is connected to a special rotary connector. The rotary connector is then further connected into an interface box that will either display the distal coronary pressure itself or convert the signal into pressure displayed on the ordinary pressure monitoring system in the cardiac catheterization laboratory. The pressure monitoring guide wire is first zeroed and advanced up to the tip of the guiding catheter. At this location, the aortic pressure and the pressure obtained from the pressure monitoring guide wire should be identical, otherwise these two pressure signals need to be normalized before carrying out any further procedures. Thereafter, the pressure monitoring guide wire is then advanced and positioned distal to the lesion. The pressure gradient is recorded at baseline and after administering a stimulus, FFR is then automatically determined by the pressure interface box.

Pharmacologic Hyperemic Stimuli

Achievement of maximum hyperemia is needed in order to obtain a meaningful FFR measurement, otherwise the actual severity of the stenosis will be underestimated, and thus administration of a pharmacological vasodilator either as intracoronary (IC) bolus or as a continuous intravenous (IV) infusion is needed for coronary pressure measurement. Several pharmacological vasodilator agents have been used, including adenosine 5'- triphosphate (ATP), adenosine, papaverine and dobutamine (Table 1). Practically speaking, the use of short acting IC vasodilators such as adenosine, ATP or papaverine is desirable, maximal hyperemia can be achieved in a very short period of time, and the measurements can be repeated within a very short time interval. Recent studies by De Bruyne et al.[8] suggested that by providing sufficient dosage, ATP, adenosine and papaverine are all able to induce maximal hyperemia, but not contrast medium. IC ATP or adenosine (20 to 40 ug) induces a similar degree of

Table 1. Comparison of four different pharmacological vasodilator agents

	ATP	Adenosine	Papaverine	Dobutamine
Intracoronary (IC) or Intravenous (IV)	Both	Both	IC	IV
Dosage	IC: 15 to 20 ug for RCA 20 to 40 ug for LCA IV: 140-160 ug/kg/min	IC: 15 to 20 ug for RCA 20 to 40 ug for LCA IV: 140-160 ug/kg/min	IC: 15 mg for RCA 20 mg for LCA	IV: 20 ug/kg/min
Time to onset of hyperemia	IC: 5 to 10s IV: 2 minutes	IC: 5 to 10s IV: 2 minutes	IC: 30 to 60s	IV: 2 minutes
Duration of hyperemia	IC: 10s IV: Infusion stop	IC: 10s IV: Infusion stop	IC: Up to 2 minutes	IV: Infusion stop
Pullback curve	IC: Impossible IV: Possible	IC: Impossible IV: Possible	IC: Possible	IV: Possible
Side effects	IC: Transient AV block (Overdose). IV: Decrease blood pressure. Increase heart rate. Unpleasant angina like burning sensation in chest.	IC: Transient AV block (Overdose). IV: Decrease blood pressure. Increase heart rate. Unpleasant angina like burning sensation in chest.	IC: Polymorphic ventricular tachycardia, ventricular fibrillation, and QTc prolongation.	IV: Increase heart rate. Decrease blood pressure.

hyperemia as an IC bolus of 20 mg papaverine in human. However, only IV ATP or adenosine and IC papaverine are able to induce steady state hyperemia.

Adenosine

Adenosine is the most common pharmacological vasodilator agent used for physiological assessments. Several studies[9,10] have shown that adenosine induces maximal vasodilation in a very short period of time (5 to 10 seconds), and the effect disappears within 30 sec. In addition, the magnitude of adenosine induced hyperemia appears to be similar to that induced by exercise-induced ischemia.[11] Besides, compared with papaverine, intravenous adenosine was found to be equivalent in pharmacologic potency without significant adverse side effects such as QTc prolongation.[12,13]

However, care must be taken during IC bolus adenosine administration. One must inject very rapidly, and flush the catheter with normal saline immediately after the drug administration. It is because IC adenosine bolus causes maximal hyperemia only for a short period of time (less than 10s). Even though it is recommended to use a dose of 15 to 20 ug in the right coronary artery (RCA) and 18 to 24 ug in the left coronary artery (LCA),[2,6] there is evidence suggesting that for some patients higher doses may be needed to observe a better hyperemic response.[14,15]

ATP

ATP has become a drug of choice recently, with the potential advantage of lower cost, and lower rate of side effect among the other common vasodilators used. ATP is a precursor of adenosine, and therefore would be expected to induce the same degree of coronary hyperemia as adenosine. Since the half-life of ATP is slightly longer than that of adenosine, it is commonly believed that the hyperemic response might be prolonged. ATP has been well established in human, it has been shown to induce maximum hyperemia for CFR (Coronary Flow Reserve) measurement[16] and Thallium-201 myocardial tomography.[17] Yamada et al[18] have reported that 50 ug of intracoronary ATP has similar vasodilator potency as 10 mg papaverine and does not produce any significant hemodynamic or electro-cardiographic changes.

Papaverine

Papaverine used to be considered as the gold standard for induction of maximum myocardial hyperemia.[19] A steady state hyperemia can be reached within 30 to 60 seconds, and last for about 60 seconds after IC bolus administration of 20 mg. However, the use of this agent has been associated with some serious clinical side effects, such as polymorphic ventricular tachycardia,[20] ventricular fibrillation[21] and QTc prolongation.[12,13] In addition, studies have also shown that IC infusion of papaverine induces a significant increase in coronary venous plasma lactate levels in patients with angiographically normal coronary artery.[22]

Dobutamine

Studies on 22 patients with single vessel coronary artery disease by Bartunek et al[23] showed that, IV infusion of dobutamine at 20 ug/kg/min induced similar degree of coronary hyperemia as adenosine, and higher dose of IV infusion did not further affect the myocardial resistance. However, up to present, there are only a few experimental and clinical studies on the effect of this agent on myocardial perfusion, studies on the feasibility and safety of using this agent as a stimulus for physiological assessment of a stenosis need to be further explored.

Intravenous (IV) vs. Intracoronary (IC)

Generally speaking, IC bolus administration offers more practical advantages than the IV infusion. IC bolus administration is much easier and faster, and a central venous access site is not needed. Only a small fraction of the IV dosage is needed for IC bolus administration, leading to significant reduction of cost. For example, compared with IC adenosine (20-40 ug for LCA; 15-20 ug for RCA), IV adenosine requires relatively large doses (140 ug/kg/min) and is therefore more costly. IC adenosine has an extremely rapid onset of action, which makes it the ideal drug for repetitive measurements. Jeremias et al[24] examined differences in FFR between IC and IV adenosine in 52 patients, and the results showed IC adenosine is equivalent to IV infusion for determination of FFR in large majority of patients. However, in a small percentage of patients

administered with IC adenosine, coronary hyperemia was believed to be sub-optimal, and a repeated higher IC adenosine may be needed. In addition, IV adenosine is associated with more side effects than IC adenosine.

On the other hand, interruption of the aortic pressure signals recording is needed for IC bolus administration. Thus, it is very important to inject the drug quickly and to flush with saline, after which the aortic pressure should be immediately displayed. This is especially important when IC ATP or adenosine is used, the peak hyperemic period is only 5 to 10 seconds long, and thus, a delay in obtaining the aortic pressure may result in inaccurate pressure measurement. The use of guiding catheters with side-holes should be avoided,[25] and proper engagement of guiding catheter should be ensured for preventing partial loss of the hyperemic drug, otherwise the pressure measurements are unreliable.

Furthermore, IC bolus administration can only determine the FFR at a single point in the arterial system. For artery with multiple lesions, in order to evaluate the physiological impact of each individual lesion on the pressure drop, a pressure pullback curve[26] can be obtained by withdrawing the pressure guide wire very slowly across the entire target artery. This curve represents the pressure gradient over the entire length of the artery and enables the registration of multiple lesions in the presence of diffuse disease. For this purpose a continuous maximal hyperemic condition is necessary, and only IC papaverine and IV ATP or adenosine induce complete, true steady state hyperemia to enable a pressure pull back maneuver. Pullback pressure recording during maximal hyperemia provides a clear demonstration of the exact location and severity of the stenosis.

FFR and Clinical Outcome

Diagnostic Applications

FFR is proven as a very useful diagnostic tool to determine whether a stenosis, found at angiography, is flow limiting and as a result is responsible for myocardial ischemia. Studies on 45 patients with moderate coronary stenosis and chest pain of uncertain origin conducted by Pijls et al[6] showed that, a FFR below 0.75 is functionally significant and has been found to correlate well with the presence of ischemia on perfusion scintigraphy, stress echocardiography and bicycle exercise testing, and that the specificity and sensitivity of FFR are 100% and 88%.

Retrospective and prospective work from the DEFER study (A randomized comparison of performance versus deferral of angioplasty based upon coronary pressure-derived fractional flow reserve) suggested that, in patients with chest pain referred for angioplasty of an intermediate stenosis, deferral of intervention in patients with FFR exceeding 0.75 is safe and results in an excellent clinical outcome.[27]

FFR guided PTCA

It has been shown a high FFR value after balloon angioplasty is associated with a favorable long-term outcome. Studies conducted by Bech et al[28] showed that long term clinical outcome after PTCA in patients with both FFR of >0.90 and residual DS of <35% is excellent and comparable with that event observed after coronary stenting. In patients with post-PTCA FFR exceeding 0.90, the restenosis rate at 6, 12 and 24 months were 11%, 12% and 15% compared with 29%, 32% and 42% in patients with post-PTCA FFR below 0.90 and a very similar angiographic result. Therefore, even with an angiographically excellent result, patients with a FFR value below 0.90 still have a high event rate, and further improvement may be achieved with coronary stent implantation.

FFR and Stent Implantation

For a normal vessel, even during maximum hyperemia, no pressure drop should be observed and the value of FFR should be equal to 1.[2] As a matter of fact, after coronary stent implantation, the conductance of the epicardial vessel should have normalized, and the FFR should be close to its normal value. Thus, it is suggested that FFR can also be used to evaluate the result of stent placement.

One recent study[29] showed that, post-stenting FFR is a strong independent predictor of outcome at 6 months. For patients with post-stenting FFR exceeding 0.95, event rate is 4.9%; for post-stenting FFR between 0.90 and 0.95 event rate is 6.2%; for post-stenting FFR

between 0.80 and 0.90, event rate is 20.3%; and for post-stenting FFR below 0.80, event rate is 29.5%. Another FFR after stenting study conducted by Hanekamp et al[30] further suggested that post-stenting FFR exceeding 0.94 corresponds very well to intravascular ultrasound (IVUS) results. Based on all this evidence, it becomes a common practice to use FFR to guide coronary stent placement. This research topic also draws the attention of another research group from the States. Studies by Fearon et al[31] showed that, based on validated IVUS criteria, post-stenting FFR below 0.96 predicts a suboptimal stent implantation result; however, the result of this study also suggested that, an post-stenting FFR exceeding 0.96 does not reliably predict an optimal stenting result.

Even though whether post-stenting FFR is reliable in evaluates optimal stent implantation is still a controversial issue, it is commonly believed that, the higher the value of post-stenting FFR, the better the long term clinical outcome.

FFR and IVUS

Other than providing valuable information regarding the morphology and distribution of coronary plaques, IVUS may also help in assessing the functional significance of a coronary stenosis. Takagi et al[32] demonstrated that IVUS minimal lumen area <3.0 mm^2 and an area stenosis >60% had a potential to predict FFR below 0.75. Recently, another comparing IVUS and FFR study conducted by Briguori et al[33] showed that, an area stenosis >70%, minimal lumen diameter of <1.8 mm, and a minimal lumen cross section area of <4.0 mm^2 were the best cutoff values for a FFR of below 0.75. Even though the IVUS thresholds of the two studies were different, the results of the studies were strongly supporting the idea that, there is a strong correlation between the FFR and IVUS findings.

Discussion

Measurement of FFR with a pressure guide wire is safe, rapid and efficient. However, this physiological assessment technique is not routinely practiced in Hong Kong or elsewhere. Three major concerns remain: 1) FFR measurement requires additional expense for the pressure guide wire and the interface box. 2) Well-trained operators and cathlab staff are needed, and the learning curve is quite long and slow. 3) Performing the pressure measurement procedure is time consuming, because exchange of balloon catheters and/or further stent deployment is needed to optimize results. Generally speaking, time should not be a concern if the cathlab staff are well trained, and the necessary components are properly prepared, i.e. the pressure console is well calibrated, cable connections are in good order, the stimulus is ready to go, and extra pressure guide wires are available in case of wire failure.

In conclusion, FFR is very useful in determining whether or not a patient will benefit from a coronary intervention. If a lesion is not physiological significant, patients will not benefit from the procedure, and medical treatment, which is safer and may eventually result in a better outcome, should be used instead. Furthermore, FFR measurement provides significant prognostic benefit and improves the quality of the intervention. As mentioned previously, a high FFR value after angioplasty or stenting is associated with a favorable long-term clinical outcome. Thus, even though the initial treatment cost is high, this extra cost is offset by a better long-term clinical outcome. Given the high cost of intervention procedures, more research on the cost-effectiveness of routine FFR guidance is needed.

References

1. De Bruyne B, Piljs NH, Paulus WJ, et al. Transstenotic coronary pressure gradient measurement in humans: in vitro and in vivo evaluation of a new pressure monitoring angioplasty guide wire. J Am Coll Cardial 1993;22:119-26.
2. Pijls NH, Van Gelder B, Van der Voort P, et al. Fractional flow reserve: A useful index to evaluate the influence of an epicardial coronary stenosis on myocardial blood flow. Circulation 1995;92:3183-93.
3. Pijls NH, van Son JA, Kirkeeide RL, et al. Experimental basis of determining maximum coronary, myocardial, and collateral blood flow by pressure measurements for assessing functional stenosis severity before and after precutaneous transluminal coronary angioplasty. Circulation 1993;87:1354-67.
4. Bartunek J, Marwick TH, Rodrigues AC, et al. Dobutamine-induced wall motion abnormalities: correlations with myocardial fractional flow reserve and quantitative angiography. J Am Coll Cardiol 1996;27:1429-36.

5. De Bruyne B, Bartunek J, Sys SU, et al. Relation between myocardial fractional flow reserve calculated from coronary pressure measurements and exercise-induced myocardial ischemia. Circulation 1995;92:39-46.
6. Pijls NH, De Bruyne B, Peels K, et al. Measurement of fractional flow reserve to assess the functional severity of coronary artery stenosis. N Engl J Med 1996;334:1703-8.
7. De Bruyne B, Bartunek J, Sys SU, et al. Simultaneous coronary pressure and flow velocity measurements in humans. Feasibility, reproducibility, and hemodynamic dependence of coronary flow velocity reserve, hyperemic flow versus pressure slope index and fractional flow reserve. Circulation 1996;94:1842-9.
8. De Bruyne B, Pijls NH, Barbato E, et al. Intracoronary and intravenous adenosine 5'- triphosphate, adenosine, papaverine, and contrast medium to assess fractional flow reserve in humans. Circulation 2003;107:1877-83.
9. Wilson RF, Wyche K, Christensen BV, et al. Effects of adenosine on human coronary arterial circulation. Circulation 1990;82:1595-606.
10. Kern MJ, Deligonul U, Tatineni S, et al. Intravenous adenosine: continuous infusion and low dose bolus administration for determination of coronary vasodilator reserve in patients with and without coronary artery disease. J Am Coll Cardiol 1991; 18:718-29.
11. Vatner SF, McRitchie RJ, Maroko PR, et al. Effects of catecholamines, exercise, and nitroglycerin on the normal and ischemic myocardium in conscious dogs. J Clin Invest 1974; 54:563-75.
12. Christensen CW, Rosen LB, Gal RA, et al. Coronary vasodilator reserve: Comparison of the effects of papaverine and adenosine on coronary flow, ventricular function, and myocardial metabolism. Circulation 1991;83:294-303.
13. Van der Voort PH, Van Hagen E, Hendrix G, et al. Comparison of intravenous adenosine to intracoronary papaverine for calculation of pressure-derived fractional flow reserve. Cathet Cardiovasc Diagn 1996;39:120-5.
14. Di Segni E, Higano ST, Rihal CS, et al. Incremental doses of intracoronary adenosine for the assessment of coronary velocity reserve for clinical decision making. Catheter Cardiovasc Interv 2001;54:34-40.
15. Jeremias A, Filardo SD, Whitbourn RJ, et al. Effects of intravenous and intracoronary adenosine 5'- triphosphate as compared with adenosine on coronary flow and pressure dynamics. Circulation 2000;101:318-23.
16. Sonoda S, Takeuchi M, Nakashima Y, et al. Safety and optimal dose of intracoronary adenosine 5'- triphosphate for the measurement of coronary flow reserve. Am Heart J 1998;135: 621-7.
17. Miyagawa M, Kumano S, Sekiya M, et al. Thallium-201 myocardial tomography with intravenous infusion of adenosine triphosphate in diagnosis of coronary artery disease. J Am Coll Cardiol 1995;26:1196-201.
18. Yamada H, Azuma A, Hirasaki S, et al. Intracoronary adenosine 5'- triphosphate as an alternative to papaverine for measuring coronary flow reserve. Am J Cardiol 1994;74:940-1.
19. Wilson RF, White CW. Intracoronary papaverine: an ideal coronary vasodilator for studies of the coronary circulation in conscious humans. Circulation 1986;73:444-51.
20. Talman CL, Winniford MD, Rossen JD, et al. Polymorphous ventricular tachycardia: a side effect of intracoronary papaverine. J Am Coll Cardiol 1990;15:275-8.
21. Wilson RF, White CW. Serious ventricular dysrhythmias after intracoronary papaverine. Am J Cardiol 1988;62:1301-2.
22. Takeuchi M, Nohtomi Y, Kuroiwa A. Intracoronary papaverine induced myocardial lactate production in patients with angiographically normal coronary arteries. Cathet Cardiovasc Diagn 1996;39:126-30.
23. Bartunek J, Wijns W, Heyndrickx GR, et al. Effects of dobutamine on coronary stenosis physiology and morphology: comparison with intracoronary adenosine. Circulation 1999; 100:243-9.
24. Jeremias A, Whitbourn RJ, Filardo SD, et al. Adequacy of intracoronary versus intravenous adenosine-induced maximal coronary hyperemia for fractional flow reserve measurements. Am Heart J 2000;140:651-7.
25. Abizaid A, kornowski R, Mintz GS, et al. Influence of guiding catheter selection on the measurement of coronary flow reserve. Am J Cardio 1997;79:703-4.
26. Pijls NH, De Bruyne B. Coronary pressure measurement and fractional flow reserve. Heart 1998;80:539-42.
27. Bech GJ, De Bruyne B, Bonnier HJ, et al. Long-term follow-up after deferral of percutaneous transluminal coronary angioplasty of intermediate stenosis on the basis of coronary pressure measurement. J Am Coll Cardiol 1998;31:841-7.
28. Bech GJ, Pijls NH, De Bruyne B, et al. Usefulness of fractional flow reserve to predict clinical outcome after balloon angioplasty. Circulation 1999;99:883-8.
29. Pijls NH, Klauss V, Siebert U, et al. Coronary pressure measurement after stenting predicts adverse events at follow up: a multicenter registry. Circulation 2002;105:2950-4.
30. Hanekamp CE, Koolen JJ, Pijls NH, et al. Comparison of quantitative coronary angiography, intravascular ultrasound, and coronary pressure measurement to assess optimum stent deployment. Circulation 1999;99:1015-21.
31. Fearon WF, Luna J, Samady H, et al. Fractional flow reserve compared with intravascular ultrasound guidance for optimizing stent deployment. Circulation 2001;104:1917-22.
32. Takagi A, Tsurumi Y, Ishii Y, et al. Clinical potential of intravascualr ultrasound for physiological assessment of coronary stenosis: relationship between quantitative ultrasound tomography and pressure-derived fractional flow reserve. Circulation 1999;100:250-5.
33. Briguori C, Anzuini A, Airoldi F, et al. Intravascular ultrasound criteria for the assessment of the functional significance of intermediate coronary artery stenoses and comparison with fractional flow reserve. Am J Cardiol 2001;87:136-41.